Spine-Savior

A Wearable Multi-Sensor Biofeedback System for Real-Time Spinal Posture Monitoring, On-Device Machine Learning Classification, and Haptic Corrective Feedback

[INSERT: High-resolution photo of Spine Savior wearable prototype — all hardware components visible: Arduino Nano 33 BLE, TCA9548A multiplexer, three BNO055 sensors, vibration motors, 3D-printed enclosures, clean white background]

Introduction

- **80% of the population will experience back pain** (Martin et al., 2014)
- Primary forms of back pain: **forward head posture** (anterior head carriage), **thoracic kyphosis** (slouching), **excessive lumbar lordosis**, and **lateral spinal tilt** (scoliosis)
- Existing commercial solutions like Upright Go use **single-axis tilt sensors,** camera-based smartphone apps **lack multi-spinal region precision** for clinically meaningful assessment
- No existing consumer device independently tracks **all three spinal regions simultaneously**
- Design and deploy a distributed **3-sensor IMU array mapping cervical (C1–C7), thoracic (T1–T12), and lumbar (L1–L5)** orientation independently
- Apply clinically-sourced biomechanical ROM constraints for physiologically **accurate 3D visualization**
- Classify postural deviations using an on-device **1D-CNN trained via TensorFlow.js**
- Deliver multimodal corrective feedback: **visual** (3D model), **cognitive** (Gemini Nano AI coaching), and **somatosensory** (haptic vibration motors)
- Achieve complete zero-cloud architecture — all computation on-device for **full biometric privacy**

[INSERT: Comparison graphic — Upright Go (single point) vs. Spine Savior (3-region distributed sensing) with spine anatomy overlay]

[INSERT: Anatomical diagram of spine showing C1–C7 cervical, T1–T12 thoracic, L1–L5 lumbar regions with sensor placement positions marked]

Methods

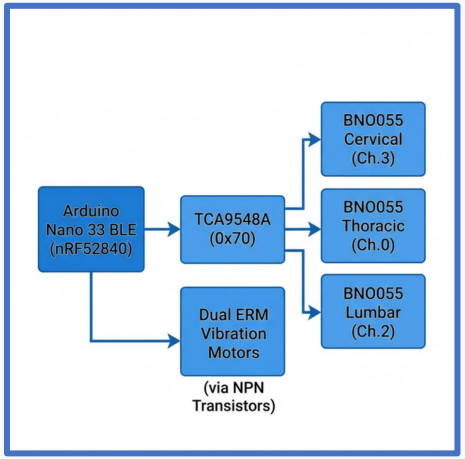

Made by ACSEF Presenter using Draw.io, Block diagram of system architecture (2026)

Picture of device on ACSEF Presenter (2026)

60 Hz
Data Rate

33 B
BLE Payload

9-DOF
Per Sensor

BNO055 9-DOF IMU × 3

- Triaxial accelerometer (±2/4/8/16g), gyroscope (±2000°/s), magnetometer (±1300µT XY, ±2500µT Z)
- Onboard ARM Cortex-M0+ running proprietary Kalman filter sensor fusion
- Outputs absolute Euler angles, eliminates external fusion software

TCA9548A I²C Multiplexer

- Resolves shared BNO055 address conflict (all sensors = 0x28)
- Sits at address 0x70 — cycles channels 0, 2, 3 sequentially

Arduino Nano 33 BLE (nRF52840)

- ARM Cortex-M4F @ 64 MHz with hardware FPU — BLE 5.0 radio integrated
- 256 KB RAM, 1 MB flash — 33-byte binary BLE GATT payload at 60 Hz

Dual Vibration Motors + Driver Circuit

- 10mm × 3mm ERM coin motors, 3V DC, ~12,000 RPM

NPN transistor (2N2222A) + 1kΩ base resistor + 1N4001 flyback diode per motor

Methods

BNO055 ×3 Euler Angles → TCA9548A 9 floats/frame → nRF52840 33-byte BLE → Web Bluetooth API (Chrome) → Three.js WebGL Render → Haptic + AI Coach

Gaussian Falloff Blending

- Weight(v) = exp(−(index_v − index_s)² / 2σ²), σ = 4.0 (empirically tuned)

Sensor indices: Lumbar=2, Thoracic=12, Cervical=20: this is the smooth bell-curve influence decay

Per-Vertebra Flexibility Weighting

L4–L5, L5–S1: 24% each (highest lumbar contribution)

C1–C2 atlas-axis: 25% each (dominant cervical rotation)

Thoracic: 6–10% per level (rib cage constraint) , which is sourced from PubMed in-vivo ROM studies

Critical Damping Spring-Damper Filter

- a = K(target − pos) − D·vel, where K=150.0, D=2√K≈24.5, ζ=1.0

Δt=1/60s , which is the same dynamic model as automotive suspension and AAA game animation

Level	Flex/Ext (°)	Lat. Bend (°)	Rotation (°)
C1–C2	15.0	8.0	40.0
C3–C7 (avg)	10.0	10.0	7.0
T1–T6 (avg)	3.5	5.0	6.5
T7–T12 (avg)	4.0	5.0	4.0
L1–L3 (avg)	10.3	10.1	1.8
L4–L5	14.3	8.8	2.1
L5–S1	14.3	7.6	1.6

Source: PubMed-published segmental ROM studies — prevents physiologically impossible model poses

Methods

INPUT	Shape: (60 timesteps × 9 channels) — 1 second at 60 Hz
CONV1D	CONV1D (32 filters, kernel=5, ReLU) → 60×32 — 1,472 params
MAX POOLING	MAX POOLING (pool=2) → 30×32
CONV1D	CONV1D (64 filters, kernel=3, ReLU) → 30×64 — 6,208 params
MAX POOLING	MAX POOLING (pool=2) → 15×64
FLATTEN	FLATTEN → 960 units
DENSE	DENSE (64 units, ReLU) + DROPOUT (30%), 61,504 params
SOFTMAX	SOFTMAX (5 classes) of 325 params each | Total: ~69,509 params

Class 1: Normal
Upright neutral spine: 1,800–5,400 frames at 60 Hz (30–90 sec hold)

Class 2: Forward Head
Anterior head carriage, where chin is forward of shoulder line

Class 3: Slouching (Thoracic Kyphosis)
Excessive upper back rounding

Class 4: Lordosis
Excessive inward lumbar curvature

Class 5: Lateral Tilt
Asymmetric lean — differential cervical/lumbar roll deviation

On-device LLM (Chrome window.ai API): prompt for zero cloud dependency: 'You are a brief, friendly posture coach. Respond with exactly 1–2 sentences of actionable advice.' Provides personalized feedback using real-time Euler angle readings per classification.

Results

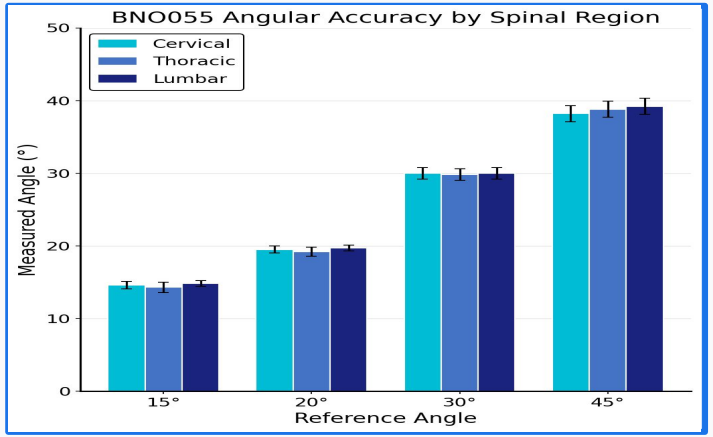

Made by ACSEF Presenter with matplotlib (2026).

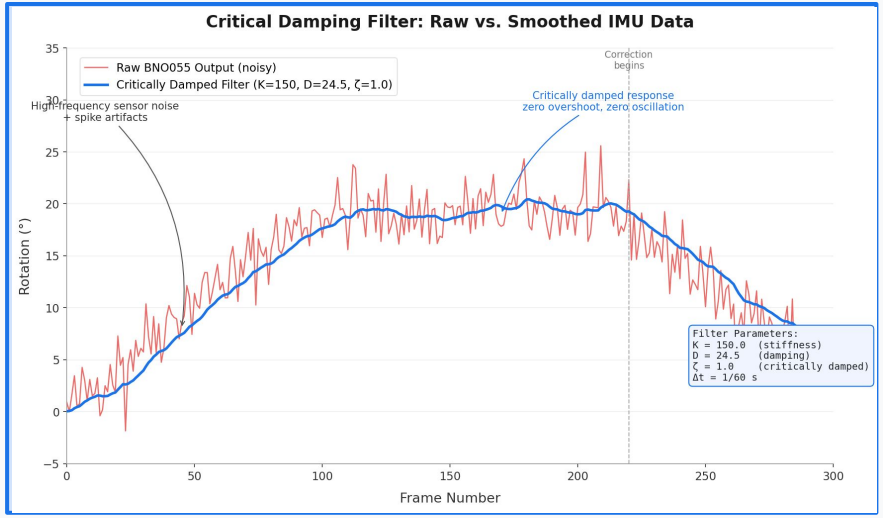

Screenshot taken by ACSEF Presenter of Spinal model (2026)

24
Articulating Vertebrae

28 ms
ML Inference Time

69,509
ML Model Parameters

~1 sec
End-to-End Latency

Results

	Normal	Fwd Head	Slouch	Lordosis	Lat. Tilt
Normal	**[19]**	[1]	[0]	[0]	[0]
Fwd Head	[1]	**[18]**	[1]	[0]	[0]
Slouch	[0]	[1]	**[18]**	[1]	[0]
Lordosis	[0]	[0]	[1]	**[19]**	[0]
Lat. Tilt	[1]	[0]	[0]	[0]	**[19]**

Precision	Recall	F1 Score	Accuracy
93.1%	**93.0%**	**0.9303**	**93.0%**

Confusion matrix results: Table made by ACSEF Presenter on Slides (2026).

Personalized On-Device Training: Design Intent

The 93.03% F1-score demonstrates that this 69,509-parameter architecture requires minimal user-specific training data — enabling a calibration-to-active transition in under 60 seconds. This system is not a one-size-fits-all population model but a personalized coach that learns each user's specific anatomy and posture habits individually.

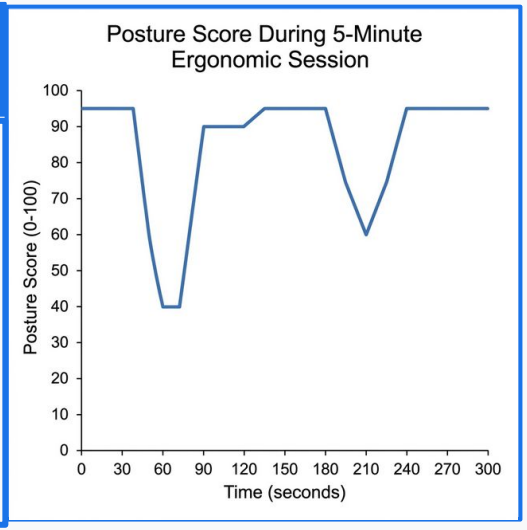

Score = max(0, round(100 × (1 − 2 × avg_normalized_deviation)))

Deviation normalized by regional ROM: Cervical 64°/49°/85°, Thoracic 26°/30°/47°, Lumbar 65°/30°/15.3° (Flex/Lat/Rot)

⚠️ **WARNING**

>50% of regional ROM

🔴 **SEVERE**

>75% of regional ROM

System closes complete sensory-motor feedback loop — deviation detected, classified, and haptic alert delivered within ~1 second

Discussion

Multi-Regional Sensing vs. Prior Art Single-axis devices like the Upright Go detect only cervical tilt, which makes differentiation of the different spinal location **impossible**
Spine Savior's three distributed IMUs **independently track cervical, thoracic, and lumbar orientation simultaneously**, enabling classification of forward head posture, thoracic kyphosis, lumbar lordosis, and lateral tilt as **distinct pathological categories**.

ROM-Normalized Scoring A uniform angular threshold treats all spinal regions equally, which is factually incorrect. Our algorithm normalizes deviations against published segmental ROM limits, correctly scoring a 10° thoracic deviation (38.5% of 26° total ROM) as more severe than a 10° cervical deviation (15.6% of 64° total ROM).

Zero-Cloud Privacy Architecture Every computational layer, from BLE transmission to Three.js rendering to TensorFlow.js inference, and Gemini Nano coaching, **executes entirely on local hardware**. Biometric spinal data never traverses a network, satisfying HIPAA-aligned privacy principles and **eliminating third-party data exposure entirely.**

Feature	Upright Go	Spine Savior ★ OUR DEVICE	Vicon (Clinical)
Sensing Regions	✗ Single thoracic axis only	✓ Cervical, Thoracic & Lumbar independently	✓ Full body marker set
ML Classification	✗ Binary threshold only	✓ 5-class 1D-CNN, 69,509 params	✗ Requires external software
Haptic Feedback	✓ Single vibration alert	✓ Dual motor, patterned alerts	✗ None — lab readout only
AI Coaching	✗ None	✓ Gemini Nano on-device LLM	✗ None
Cloud Dependency	✗ App required, cloud sync	✓ Zero cloud — fully local	✗ Proprietary software suite
Cost	$99 USD	~$150 USD	$10,000+ USD
Portability	✓ Wearable, consumer	✓ Wearable, portable	✗ Lab-bound only

Table comparing our device to others on the market, made in Canva by ACSEF Presenter (2026).

Discussion

PROBLEM: I²C Address Collision

All 3 BNO055 sensors share hardcoded address 0x28 → fatal bus collision → no sensor data readable

SOLUTION ENGINEERED

TCA9548A multiplexer (0x70) isolates each sensor on dedicated channel (Ch.0=Thoracic, Ch.2=Lumbar, Ch.3=Cervical) — sequential polling eliminates all collisions

PROBLEM: Motor Inductive Flyback

Vibration motors generate reverse voltage spike on shutdown → microcontroller reset, data corruption, false haptic alerts

SOLUTION ENGINEERED

2N2222A NPN transistor + 1kΩ base resistor + 1N4001 flyback diode per motor — suppresses back-EMF, zero resets post-implementation

PROBLEM: TCA9548A SDA1/SCL1 Pin Failure

Primary I²C port non-functional despite verified wiring and firmware, with source undiagnosed (possible PCB trace defect)

SOLUTION ENGINEERED

Systematically ruled out code and solder errors → identified secondary port SDA2/SCL2 as functional alternative, which immediately restored communication

Each challenge reflects genuine professional-grade hardware/software integration problem-solving. Solutions were independently derived through systematic diagnosis.

Discussion

Innovation 1	Innovation 2	Innovation 3	Innovation 4	Innovation 5
Multi-Regional Distributed IMU Sensing Independently tracks C/T/L spine with differential diagnosis impossible with single-sensor devices	**Clinically-Sourced ROM Constraints** PubMed segmental data prevents physiologically impossible 3D poses which adds clinical validity	**Personalized On-Device 1D-CNN** Trained on individual user anatomy, customized classifiers, not generic population model	**Zero-Cloud Architecture** All computation local: BLE + WebGL + TF.js + Gemini Nano , giving us HIPAA-aligned biometric privacy	**Trimodal Feedback Loop** Visual + Cognitive (AI) + Somatosensory (haptic) sends corrections regardless of attentional state

Commercial posture devices operate on binary 'good/bad' thresholds from single tilt sensors. Spine Savior is the **first system** at **any price point** to simultaneously: (1) **independently track all three spinal regions** using distributed IMUs, (2) **apply vertebra-level PubMed-sourced ROM constraints to prevent biomechanically impossible poses,** (3) **train a personalized 1D-CNN on-device for user-specific classification,** and (4) **deliver trimodal corrective feedback** through a complete closed sensory-motor loop, all with **zero cloud dependency.**

Clinical-grade motion capture systems (Vicon) achieving comparable anatomical precision cost $10,000+ and are strictly laboratory-bound. **Spine Savior achieves comparable multi-regional tracking in a portable, sub-$150 wearable.**

Moderate deviation: double-pulse (200ms ON / 100ms OFF / 200ms ON). Severe deviation (>75% ROM): continuous 2-second vibration. 30-second cooldown prevents sensory habituation.

Conclusions

- Successfully engineered a distributed 3-BNO055 wearable system independently tracking cervical (C1–C7), thoracic (T1–T12), and lumbar (L1–L5) orientation simultaneously via TCA9548A I^2C multiplexing

Implemented clinically-sourced segmental ROM constraints from PubMed data across all 24 articulating vertebrae in a real-time Three.js WebGL spine model

Trained and deployed an on-device 1D-CNN (69,509 parameters, TensorFlow.js v4.17) classifying 5 posture classes from 60-frame sliding window temporal sequences

Achieved complete zero-cloud architecture: BLE 5.0 wireless link, WebGL rendering, ML inference, and Gemini Nano LLM coaching — all executing locally

Closed the full sensory-motor feedback loop — deviation detected, classified, and haptic alert delivered within ~1 second

Yes. All five engineering objectives were achieved: multi-regional sensing, biomechanical constraints, personalized ML classification, trimodal feedback, and zero-cloud privacy, all in a portable sub-$150 wearable.

Native Mobile App

Replace browser Web Bluetooth with native iOS/Android BLE, allowing for full-day ambulatory monitoring

Custom PCB + LiPo

Single-board integration of Nano 33 BLE + TCA9548A + motor drivers that would result in ~70% form factor reduction, multi-hour battery

Longitudinal ML Training

Continuous model retraining as user's posture habits evolve: an adaptive classifier that improves with use

References/Acknowledgements

American Chiropractic Association. (2024). Back pain facts and statistics. Retrieved from acatoday.org
Bosch Sensortec. (2023). BNO055 intelligent 9-axis absolute orientation sensor datasheet. Bosch Sensortec GmbH.
Texas Instruments. (2023). TCA9548A low-voltage 8-channel I²C switch with reset. Texas Instruments.
Nordic Semiconductor. (2023). nRF52840 product specification v1.7. Nordic Semiconductor ASA.
Panjabi, M. M., et al. (1994). Mechanical properties of the human lumbar spine. Journal of Orthopaedic Research.
Dvorak, J., et al. (1988). In vivo flexion/extension of the normal cervical spine. Journal of Orthopaedic Research.
Google Developers. (2024). Web Bluetooth API specification. Retrieved from developer.chrome.com
TensorFlow.js Team. (2024). TensorFlow.js v4.17 documentation. Retrieved from tensorflow.org/js
Three.js Authors. (2024). Three.js r160 documentation. Retrieved from threejs.org
Ordoñes, C., & Roggen, D. (2016). Deep convolutional and LSTM recurrent neural networks for multimodal wearable activity recognition. Sensors, 16(1).

[Insert names of mentors, science fair coordinators, teachers, and family members who provided direct support.]

⚠️ Required AI Disclosure

Generative AI (Claude, ChatGPT) was utilized for: idea generation during early concept development, code syntax debugging assistance, and streamlining data visualization formatting. Google Gemini Nano is integrated as a functional component of the prototype itself for on-device posture coaching. All core hardware engineering, physical assembly, firmware architecture, machine learning model design, and software systems represent original student work.

5

Feedback Modalities

0

Cloud Dependencies